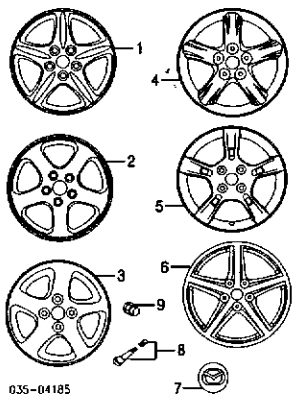

4	Sedan	
	Hitachi Brand	9965-47-6060
	U-Mold Brand	
	Buffed Type	9965-49-6060
	Non-Buffed Type	9965-48-6060
	Wheel, Alloy	
	17x7"	
5	MAZDASPEED Model¶	9965-49-6060
6	MP3 Model	9965-05-7070
	¶*Order by Application*	
7	**Cap, Center**	
	15x6" Wheels	GJ6G-37-192
	16x6" Wheels	
	Type 1	B30P-37-192
	Type 2	B33M-37-192
	17x7" Wheels	BN7H-37-192
8	**Stem, Valve**	9963-60-4130
9	**Nut, Lug**	B002-37-160A

SPARE WHEEL & HARDWARE

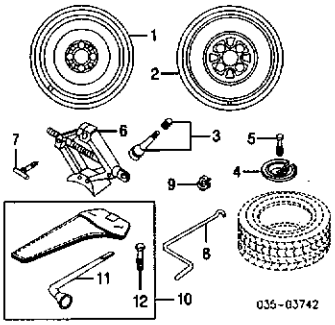

	Wheel, Spare		
1	14x4"	99-00	9965-21-4040
2	15x4"	99-00	9965-31-4050
		01-03	9965-35-4050
	Wheel, Spare		
	16"		N.A.
	17"		N.A.
3	**Valve, Stem**		9963-60-4130
4	**Clamp, Spare Wheel**		GA5R-56-971C
5	**Bolt, Anchor**		
	50mm		G14R-56-961
	65mm		8532-56-961
	75mm		G030-56-961
6	**Jack**	99-00	B455-37-790C
		01-03	B25D-37-790B
7	**Bolt, Jack**		B001-56-170C
8	**Handle, Jack**		B210-37-810
9	**Holder, Jack Handle**		G030-56-176
10	**Tool Assy**		
	Hatchback		BN5V-69-650
	Sedan		
	DX, ES, LX, SE Model		BR70-69-650B
	MAZDASPEED, MP3 Model		BL8M-69-650
11	**Wrench, Hub¶**		NA01-68-070
12	**Bolt¶**		
	Hatchback		B093-56-961
	Sedan		G091-56-961
	¶*Included w/Tool Assy*		

FRONT SUSPENSION

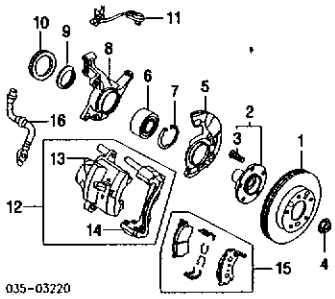

1	**Rotor, Brake**		
	1.6L Eng	R/L	BJ0Y-33-25X
	1.8L Eng	R/L	BJ1Y-33-25X
	2.0L Eng		
	w/Rear Disc Brakes	R/L	GA4Y-33-250J
	w/o Rear Disc Brakes	R/L	BJ1Y-33-25X
2	**Hub Assy, Wheel**		
	w/Rear Disc Brakes	R/L	C100-33-060
	w/o Rear Disc Brakes	R/L	B01A-33-060A
3	**Stud, Wheel¶ (4/Side)**		
	w/Rear Disc Brakes	R/L	B455-33-062
	w/o Rear Disc Brakes	R/L	B01Y-33-062
	¶*Included w/Wheel Hub Assy*		
4	**Nut, Axle**	R/L	GJ21-33-042B
5	**Shield, Splash**	R	B25D-33-261
		L	B25D-33-271
6	**Bearing, Wheel**	R/L	B455-33-047D-MV
7	**Ring, Snap**	R/L	B21M-33-048
8	**Knuckle, Steering**		
	1999		
	w/ABS		
	To 6-25-99	R	B25D-33-021B
		L	B25D-33-031B
	From 6-25-99	R	C100-33-021B
		L	C100-33-031B
	w/o ABS		
	To 6-25-99	R	BJ0E-33-021B
		L	BJ0E-33-031B
	From 6-25-99	R	CB01-33-021A
		L	CB01-33-031A
	2000-03		
	w/ABS	R	C100-33-021B
		L	C100-33-031B
	w/o ABS	R	CB01-33-021A
		L	CB01-33-031A
9	**Seal, Oil**	R/L	G304-33-065
10	**Rotor, ABS Sensor-See Front Drive Axle Section**		
11	**Sensor, Front ABS-See ABS/Brakes Section**		
12	**Caliper Assy, Brake**		
	1999-02		
	1.6L Eng	R	B2YC-33-98ZR
		L	B2YC-33-99ZR
	1.8L, 2.0L Eng	R	GAZR-33-98Z
		L	GAZR-33-99Z
	2003		
	1.6L Eng	R	B2YC-33-98ZR
		L	B2YC-33-99ZR
	2.0L Eng		
	w/Turbo	R	BPYH-33-98Z
		L	BPYH-33-99Z
	w/o Turbo	R	GAZR-33-98Z
		L	GAZR-33-99Z
13	**Caliper, Brake¶**		
	1999-02		
	1.6L Eng	R	B26C-33-61X
		L	B26C-33-71X
	1.8L, 2.0L Eng	R	GA5R-33-61X
		L	GA5R-33-71X
	2003		
	1.6L Eng	R	B26C-33-61X
		L	B26C-33-71X
	2.0L Eng		
	w/Turbo	R	BP7H-33-61X
		L	BP7H-33-71X
	w/o Turbo	R	GA5R-33-61X
		L	GA5R-33-71X
14	**Carrier, Caliper¶**		
	1999-02		
	1.6L Eng	R/L	B26C-33-281
	1.8L, 2.0L Eng	R	GA5R-33-28X
		L	GA5R-33-29X
	2003		
	1.6L Eng	R/L	B26C-33-281
	2.0L Eng		
	w/Turbo	R	BP7H-33-28X
		L	BP7H-33-29X
	w/o Turbo	R	GA5R-33-28X
		L	GA5R-33-29X
	¶*Included w/Brake Caliper Assy*		
15	**Pad Set, Brake**		
	1999-02		
	1.6L Eng		B2YD-33-23Z
	1.8L Eng		GCYD-33-23ZE
	2.0L Eng		BLYM-33-23Z
	2003		
	1.6L Eng		B2YD-33-23Z
	2.0L Eng		
	w/Turbo		CBY3-33-23Z
	w/o Turbo		BLYM-33-23Z
16	**Hose, Brake**	R/L	B25D-43-980A

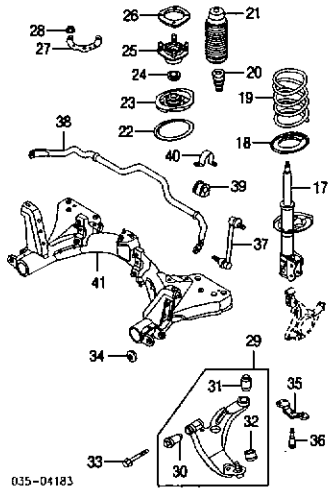

17	**Strut**		
	1999-00	R	B26R-34-700A
		L	B26R-34-900A
	2001		
	w/Rear Disc Brakes		
	ES, LX, SE Model	R	BL8P-34-700A
		L	BL8P-34-900A
	MP3 Model	R	BN7H-34-700A
		L	BN7H-34-900A
	w/o Rear Disc Brakes		
	To 1-01	R	BL2A-34-700A
		L	BL2A-34-900A
	From 1-01	R	BL2A-34-700B
		L	BL2A-34-900B
	2002		
	Hatchback		
	To 4-1-02	R	BN5V-34-700
		L	BN5V-34-900
	From 4-1-02	R	BL8P-34-700B
		L	BL8P-34-900B
	Sedan		
	w/Rear Disc Brakes		
	To 4-1-02	R	BL8P-34-700A
		L	BL8P-34-900A
	From 4-1-02	R	BL8P-34-700B
		L	BL8P-34-900B
	w/o Rear Disc Brakes	R	BL2A-34-700B
		L	BL2A-34-900B
	2003		
	Hatchback	R	BL8P-34-700B
		L	BL8P-34-900B
	Sedan		
	DX, ES, LX, SE Model		
	w/Rear Disc Brakes	R	BL8P-34-700B
		L	BL8P-34-900B
	w/o Rear Disc Brakes	R	BL2A-34-700B
		L	BL2A-34-900B
	MAZDASPEED Model	R	BP7H-34-700B
		L	BP7H-34-900B
18	**Seat, Lower Rubber**	R/L	B25D-34-0A3
19	**Spring, Coil**		
	1999-00		
	1.8L Eng	R/L	BJ3P-34-011A
	1.8L Eng		
	Man Trans	R/L	BJ3P-34-011A
	Auto Trans	R/L	BJ4P-34-011A
	2001		
	DX, ES, LX, SE Model		
	Man Trans	R/L	B26M-34-011B
	Auto Trans	R/L	B27R-34-011A
	MP3 Model	R/L	BN7H-34-011A
	2002		
	Hatchback	R/L	B26M-34-011B
	Sedan		
	Man Trans	R/L	B26M-34-011B
	Auto Trans		
	To 3-1-02	R/L	B27R-34-011A
	From 3-1-02	R/L	B26M-34-011B
	2003		
	DX, ES, LX, SE Model	R/L	B26M-34-011B
	MAZDASPEED Model	R/L	BN7H-34-011A
20	**Bumper, Rebound**		
	DX, ES, LX, SE Model	R/L	C100-34-111A
	MAZDASPEED, MP3 Model	R/L	BN7H-34-111
21	**Boot, Dust**	00-03 R/L	C100-34-0A5