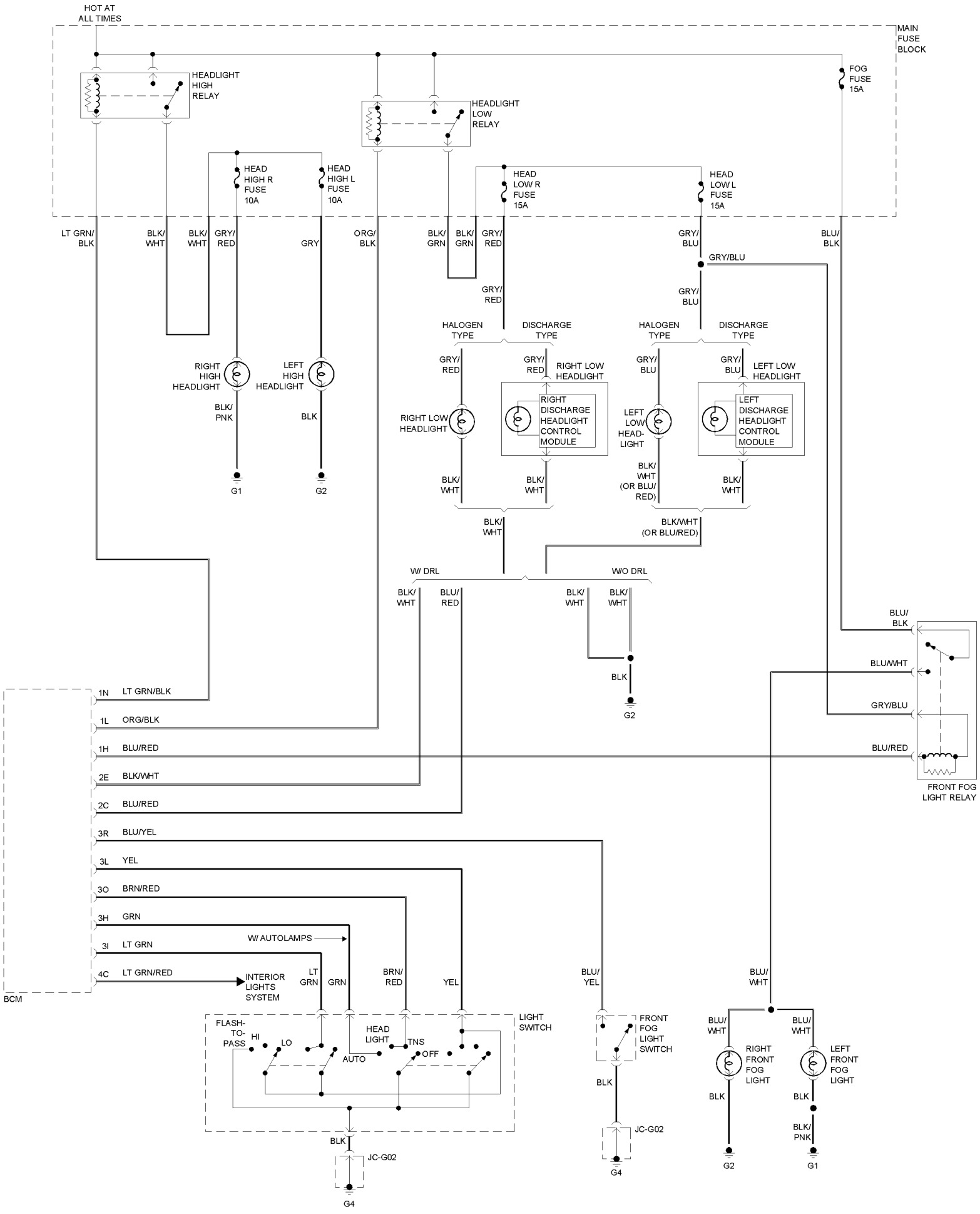
HOT AT ALL TIMES
MAIN FUSE BLOCK
HEADLIGHT HIGH RELAY
HEADLIGHT LOW RELAY
FOG FUSE 15A
HEAD HIGH R FUSE 10A
HEAD HIGH L FUSE 10A
HEAD LOW R FUSE 15A
HEAD LOW L FUSE 15A
LT GRN/BLK
BLK/WHT
BLK/WHT
GRY/RED
GRY
ORG/BLK
BLK/GRN
BLK/GRN
GRY/RED
GRY/BLU
BLU/BLK
GRY/BLU
GRY/RED
GRY/BLU
HALOGEN TYPE
DISCHARGE TYPE
HALOGEN TYPE
DISCHARGE TYPE
RIGHT HIGH HEADLIGHT
LEFT HIGH HEADLIGHT
BLK/PNK
BLK
G1
G2
GRY/RED
GRY/RED
RIGHT LOW HEADLIGHT
RIGHT DISCHARGE HEADLIGHT CONTROL MODULE
RIGHT LOW HEADLIGHT
GRY/BLU
GRY/BLU
LEFT LOW HEADLIGHT
LEFT DISCHARGE HEADLIGHT CONTROL MODULE
LEFT LOW HEAD-LIGHT
BLK/WHT
BLK/WHT
BLK/WHT (OR BLU/RED)
BLK/WHT
BLK/WHT
BLK/WHT (OR BLU/RED)
W/ DRL
W/O DRL
BLK/WHT
BLU/RED
BLK/WHT
BLK/WHT
BLK
G2
BLU/BLK
BLU/WHT
GRY/BLU
BLU/RED
FRONT FOG LIGHT RELAY
1N LT GRN/BLK
1L ORG/BLK
1H BLU/RED
2E BLK/WHT
2C BLU/RED
3R BLU/YEL
3L YEL
3O BRN/RED
3H GRN
3I LT GRN
4C LT GRN/RED
BCM
W/ AUTOLAMPS
INTERIOR LIGHTS SYSTEM
LT GRN
GRN
BRN/RED
YEL
BLU/YEL
BLU/WHT
LIGHT SWITCH
FLASH-TO-PASS
HI
LO
HEAD LIGHT
AUTO
TNS
OFF
BLK
JC-G02
G4
FRONT FOG LIGHT SWITCH
BLK
JC-G02
G4
BLU/WHT
BLU/WHT
RIGHT FRONT FOG LIGHT
LEFT FRONT FOG LIGHT
BLK
BLK
BLK/PNK
G2
G1
270666