2010 Mazda 3i Sport Power Door Lock Project
Wiring Schematic

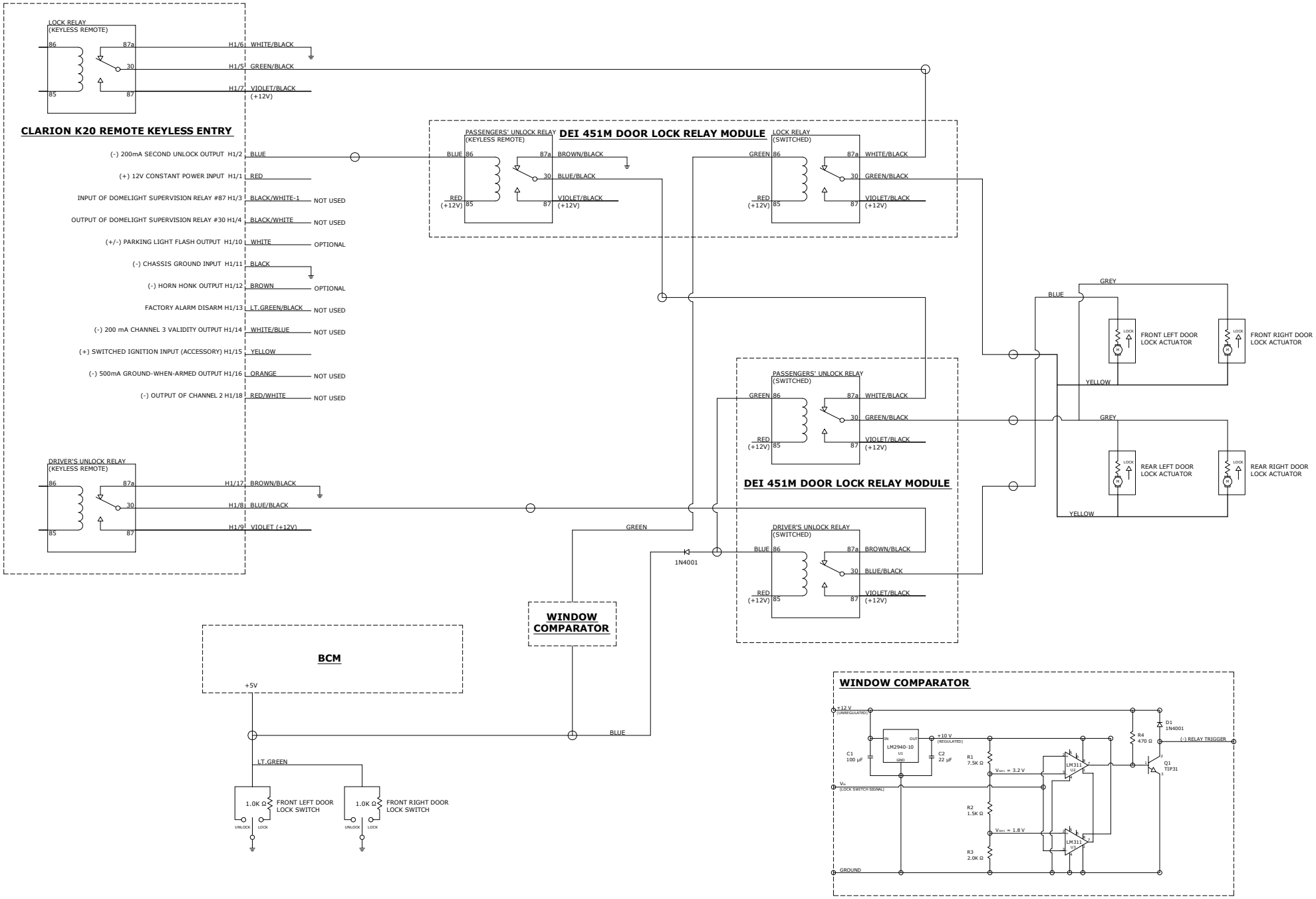

REV. 2_10 APR 10